Cover Page for CTF Project/Program Approval Request		
1. **Country/Region**	India, Indonesia and the Philippines	
2. **CIF Project ID#**	*(Trustee will assign ID)*	
3. **Project/Program Title**	**Renewable Energy Mini-grids and Distributed Power Generation**	
4. **Type of CTF Investment**	☐ Public	x Private
5. **Terms and Amount Requested in million USD equivalent**	Investment Capital: Grant: Administrative budget: MDB fee (MPIS): **Total:**	$ 30,000,000 $ 3,500,000 $ 650,000 $ 175,000 **$ 34,325,000**
6. **Implementing MDB**	Asian Development Bank (ADB)	
7. **National Implementing Agency**	N/A	
8. **Contact Information of MDB Focal Point and Project/Program Task Team Leader (TTL)**	Headquarters Focal Point: Mr. Don Purka, Principal Investment Specialist and CIF Private Sector Focal (dpurka@adb.org) Mr. Jiwan Acharya, Senior Climate Change Specialist and CTF Focal (jacharya@adb.org)	Task Team Leader: Multiple

9. Brief Description of Project/Program (including objectives and expected outcomes)

Under the CTF Dedicated Private Sector Program, this sub-program seeks to catalyze growth in access to electricity by addressing primarily financial barriers to private sector led distributed power generation and "mini grid" development from renewable energy (RE) in the CTF pilot countries of India, Indonesia and the Philippines. The Program will address the fundamental challenge of transforming the energy landscape via combinations of new business models and technologies that deliver clean, reliable, and affordable energy to bottom-of-the-pyramid consumers who will likely never be served by conventional centralized electricity grids. The program is about transformational change in the way modern energy is provided to underserved populations. It is not only about increasing access to electricity, but about leapfrogging centralized electricity grids (traditionally powered by fossil fuels) with renewable energy technologies and putting these new energy consumers on a low carbon growth trajectory.

The Program will deploy $30 million of investment capital over approximately three years to multiple private sector companies and will be supported by a $3.5 million technical assistance advisory program, administered in collaboration with ADB's existing Energy for All Partnership. As successful models are identified, the Program will be expanded to other CIF eligible countries in Asia and the Pacific, as well as other regions where such learning and business models can be expanded and scaled up.

10. Consistency with CTF Investment Criteria

(1) Potential GHG Emissions Savings:
The proposed investments will facilitate up to 10 MW of new mini-grid capacity, with estimated GHG emission reductions of approximately 630,000 tCO_2e from the estimated 20 year life of the Program. *See Program proposal, page 8.*

(2) Cost-effectiveness
The cost effectiveness of emission reductions from CTF funds is approximately $54 per ton of CO_2e. *See Program proposal, page 8.*

(3) Demonstration Potential at Scale
The Program conservatively expects a replication and scale up potential of around 600 MW of new capacity, equivalent to an increase in access to electricity for potentially 30 million people. This scale up would achieve emission reductions of around 37.9 million tonnes of CO_2e, and a cost effectiveness of $38 per ton of CO_2e. The expected investment required would be roughly $1.4 billion. *See Program proposal, page 8.*

(4) Development Impact
The development benefits of this Program will be transformational: lighting for homes and schools, cleaner indoor air, increased income-generating opportunities, better equipped health clinics, electricity for tools, agricultural equipment and sanitation, and more small and medium sized enterprises. Access to electricity is crucial for the achievement of four of the eight Millennium Development Goals (MDGs). *See Program proposal, page 9.*

(5) Implementation Potential
The program will support the implementation of multiple projects with an aggregate capacity of up to 10 MW with credible private sector investors that have piloted mini-grid operations in India, Indonesia and the Philippines. *See Program proposal, page 10.*

(6) Additional Costs and Risk Premium
Additional costs for the Program mainly relate to transaction costs for establishing and growing mini-grid businesses. This Program provides assistance to developers through access to financing, particularly during the early and scale-up phases, when capital is scarce and transaction costs are the highest. *See Program proposal, page 11.*

(7) Financial Sustainability
The financial sustainability of this Program depends mainly on the investor or entrepreneur's ability to execute the commercial business plan according to projections. Each project supported by the Program will comply with ADB's policies. There will be incentives and contractual obligations for companies and funds to adequately assess the financial sustainability risks of individual projects. *See Program proposal, page 11.*

(8) Effective Utilization of Concessional Finance
In target countries, with young but growing pipelines of innovative private sector developers, concessional finance is required to overcome "first mover" barriers, lower the risk profile and expand the sector. *See Program proposal, page 12.*

(9) Mitigation of Market Distortions

The Program will not negatively distort the markets in target countries as it provides investment that is currently not available for scaling up operations. *See Program proposal, page 12.*

(10) Risks

The program manages risks relating to business plan execution, technical systems, soft systems (information, marketing, education and capacity building), operation and maintenance, as well as policy and regulatory risks. *See Program proposal, page 13.*

11. Stakeholder Engagement

The Program will showcase the potential for investments in mini-grids and distributed power generation and engage with private sector companies and investment funds and government agencies, to leverage additional investments. The Program has been formulated in conjunction with ADB's ongoing engagement with governments and regulators in India, Indonesia and the Philippines, established through lending activities and energy access programs such as the Energy for All Partnership[1]. The Program will also strongly encourage community engagement and RE mini-grid subprojects will promote participative decision- making and social inclusiveness.

12. Gender Considerations

Increased access to reliable energy will save time for women, typically spent on fuel collection, and provides opportunities for income-generating activities such as small and medium sized enterprises, workshops and restaurants. It will especially benefit the health of women through improving indoor air quality by avoiding the burning of kerosene, candles and other combustible fuels.

13. Indicators and Targets (consistent with results framework)

Core Indicators	Targets	
GHG emissions avoided	tons of CO_2 equivalent per annum	31,500
CTF financial leverage		3 to 1
Increased supply of RE	Installed capacity (MW)	10
	Generation (GWh/y)	29,200
Number of previously non-electrified households provided with access to electricity		50,000 – 100,000
Number of new jobs generated		300 direct jobs 600 indirect jobs

14. Expected Date of MDB Approval

September 2014 for the first project under this Program

Version March 6, 2014

[1] http://www.energyforall.info/

CTF PRIVATE SECTOR PROPOSAL

Name of Program	**RENEWABLE ENERGY MINI-GRIDS AND DISTRIBUTED POWER GENERATION**
CTF amount requested	Investment Capital – up to $30 million equivalent Technical Assistance and Advisory Program (Grant) – $3.5 million Implementation and supervision budget - $0.65 million (see Appendix 1) MDB fee (MPIS) - $0.18 million (see Appendix 1) Total – $34.3 million
Country targeted	Phase I: India, Indonesia and the Philippines Potential ADB developing member countries for Phase II and III: Bangladesh, Myanmar, Nepal, Cambodia, Maldives, Papua New Guinea and the Pacific Region.
Indicate if proposal is a Project or Program	Program. The proposed Program ("the Program") promotes development of renewable energy mini-grid systems by providing equity and debt financing to mini-grid companies and funds with a proven track of operations in India, Indonesia and/or the Philippines supporting off-grid clean energy projects.

In developing this proposal, ADB has already begun to engage with prospective clients for the proposed projects under the Program. To maintain credibility in the market, ADB can only engage further if there is confirmation that funds would be available to approve and disburse when required by the client. For this reason, per paragraph 33 of the CTF Financing Products, Terms and Review Procedures for Private Sector Operations, as revised on October 24, 2012, ADB is requesting the CTF Trust Fund Committee to approve and direct the Trustee to provide ADB with an unconditional letter of commitment for the entire amount required for the Program. Such approval would allow for the upfront transfer of up to the entire amount of the Program from the Trustee to the ADB, based on the confirmation of availability of ***$ 34.3 million*** *by the Trustee as evidenced in Annex B. The transfer would be subject to (a) approval by the ADB Board of Directors of the investment sub-projects, and (b) submission of a transfer request to the Trustee including the anticipated closing date of the relevant sub-projects. The TFC will be updated on the approval and implementation of projects as per CTF reporting guidelines.*

DETAILED DESCRIPTION OF PROGRAM

A. Regional, Country and Sector Context

1. An estimated 1.16 billion people (17% of the world's population) currently live without access to electricity, and an estimated 615 million of these people live in Asia[2]; the majority in the CTF pilot countries of India (306 million), Indonesia (66 million), and the Philippines (16 million)[3]. These people depend principally on biomass, candles, and kerosene to meet their lighting, cooking, and energy needs. As a result, they generally suffer from poor rates of literacy, low levels of education, inadequate health care, poor communication, low levels of income generation and cyclic poverty.

2. In contrast, modern energy services bring dramatic improvements to people's lives in a multitude of different ways. Improved lighting, education, communication, health care and security bring instant improvements to standards of living. Furthermore, reliable electricity brings longer term opportunities for establishing small and medium sized business and improving income-generating activity to help communities break the cycle of poverty and transition to middle-income economies.

3. Access to electricity should not be considered as a panacea for eliminating poverty, but it is indelibly linked with accomplishing a range of development goals, and is widely considered to have a catalytic impact on development pathways. This program is about transformational change in the way modern energy is provided to people with no electricity. It is not only about increasing access to electricity, but about leapfrogging fossil-fuel dominated centralized electricity grids with clean energy technologies. Much the same way as mobile phones have transformed modern telecommunications and bypassed fixed-line phone services, it is anticipated that private sector-led mini grid development will lead to the rapid expansion of off-grid electricity access.

4. Electrification rates are improving gradually in some developing countries. From 1990-2010 access to electricity in urban areas worldwide increased by around 1.1 billion people, while in rural areas access increased by around 0.3 billion people[4]. In India, Indonesia and the Philippines, annual growth rates for grid electrification have reached 2% per year[5]. This expansion rate suggests that universal electrification can be achieved within the next few decades assuming that technical, physical, and financial barriers can be eliminated. Unfortunately, the simple arithmetic of expanding centralized grids is misleading, and the geographic and realities of mountain ranges with limited access (e.g., northern India) and archipelagos (e.g., Indonesia and the Philippines) means that large regions of Asia are unlikely to ever be connected to a large centralized grid. Acknowledging the limits of centralized electricity grids, the International Energy Agency estimates that to achieve universal access to electricity 70% of the rural areas that currently lack access will need to be connected using mini-grid or off-grid solutions[6]. As a result, these countries are

[2] World Energy Outlook, IEA, 2013
[3] A breakdown of electricity access for different regions and countries can be found in Appendix 3.
[4] Global Tracking Framework, Sustainable Energy for All, 2013. Steering Group led jointly by the World Bank/Energy Sector Management Assistance Program (ESMAP) and the International Energy Agency (IEA), Doc No. 77889 v.3.
[5] World Bank Global Electrification Database, 2012.
[6] International Energy Agency, 2010. Energy Poverty – How to make access to energy universal? http://www.worldenergyoutlook.org/media/weowebsite/2010/weo2010_poverty.pdf?bcsi_scan_e41ddc73166bc1eb=0&bcsi_scan_filename=weo2010_poverty.pdf

characterized by non-uniform levels of electrification. As stated in their CTF Country Investment Plans, India, Indonesia and the Philippines all aim to increase: (i) their levels of off-grid electrification, and (ii) their usage of clean energy and energy efficient technologies[7,8,9].

5. In India, the Jawaharlal Nehru National Solar Mission (JNNSM) is the main policy initiative to promote solar energy, including off-grid power development. It targets 200 MW of new off-grid installed capacity by March 2013, 1,000 MW by 2017 and 2,000 MW by 2022. The Government of India's primary rural electrification initiative, the Rajiv Gandhi Grameen Vidyutikaran Yojana (RGGVY) scheme, focuses on providing basic lighting and electricity facilities powered by renewable energy sources. MNRE currently offers a 30% capital subsidy for off-grid electricity generation but it is only paid post installation after verification. The Electricity Act 2003 has also been a major step towards the liberalization of the power market and attracting private investment, but it is focused primarily on the centralized grid model of electrification.

6. In Indonesia, the Directorate General of New, Renewable Energy, and Mineral Resources has goals of increasing rural electrification from 70% to 90% by 2020 and decreasing diesel power generation from 21% to 3% by 2015. The state owned electricity company, PLN, is initiating a distributed solar PV development program ("1000 Islands"), and plans to install a total of 620MW of solar PV (through integration with diesel biomass, and other sources of RE) on remote islands by 2020. The country plans to increase its share of renewables from 6% in 2006 to 17% by 2020 and decrease CO_2 emissions by 30% from business as usual in the period from 2012–2025.

7. In the Philippines, the Accelerated Barangay Electrification Program was launched in 1999 with the Department of Energy, the National Electrification Administration and other government agencies. The program also led to the creation of the Foundation for Rural Electrification and Economic Development, and in 2001 the Philippine government established the Expanded Rural Electrification Program under the Electric Power Industry Reform Act. The Government has also outlined ambitious objectives for renewable energy development (including becoming the largest supplier of geothermal energy in the world over the next ten years), and this is currently governed under the Philippine Renewable Energy Act (2008).

B. Key Benefits of Mini-Grids[10]

8. Mini-grids offer transformative benefits to the lives of users, particularly in areas where there has previously been no access to reliable electricity. This includes people who are connected to an electricity grid, but who often only receive electricity for a few hours per day, often at times when it is not needed. Improved indoor lighting has a strong impact on literacy, numeracy, and levels of education. Electric lighting allows school-aged individuals to read and study after dark when the ordinary working day has finished. It allows individuals, particularly women, to participate in higher income earning activities such as small-goods and handicraft production, and to devote more time to income generation rather than on the collection of tradition fuel or traveling to charge phones and batteries.

[7] Clean Technology Fund Investment Plan For India, 2011. Meeting of the CTF Trust Fund Committee, Washington, D.C., November 4, 2011.
[8] Clean Technology Fund Revised Investment Plan for the Philippines, July 2012. CIF website.
[9] Clean Technology Fund Revision Of The Investment Plan For Indonesia, 18 March 2013. CIF website.
[10] A more detailed description of mini-grids and their benefits can be found in Appendix 4

9. Street and home lighting systems improve security and enhance social elements of village life. Mobile phones, radios, computers and other communication devices bring increased socio-economic capacity, income generating activity, and increased social mobility. Health care is improved through the provision of refrigerated vaccines and access to telemedicine. Access to electricity allows families to develop small businesses such as restaurants, shops, and local scale manufacturing industries, and can be used to power farm equipment to mechanise manual tasks. In short, access to modern electricity services has a profound positive effect on people's lives, and is essential to achieving a wide range of development goals.

C. Barriers to Scale Up

10. Traditionally there are three main business models that have been used for mini grid development: (i) a utility-based approach, (ii) a community based approach, and (iii) a private sector-led approach. Whilst modest gains have been made in electrification rates over the past 20 years, utility based approaches to mini-grids have suffered from slow development, bureaucracy, a mind-set of traditional large scale planning, and inflexibility in regard to issues such as ownership, billing and customer management. Community based systems have been successful in some contexts, but have not yet shown the scale and replicability needed to rapidly electrify large populations.

11. In contrast, private sector-led approaches are seen by many as a bottom up approach that can circumvent red-tape and establish electricity access to people unlikely to be connected to centralized grids more quickly and efficiently than other models of business development[11]. This model has proven to be a lighter, more flexible and more innovative approach, which is required to navigate the issues involved in establishing projects. The private sector generally has more flexibility in terms of financing, ownership, business models, billing arrangements (including prepaid and leasing models, which have had good success) and is considered to be a generally more efficient model of development than what can be offered by the public sector for this application.

12. In target countries, the Program seeks to remove a specific set of barriers currently inhibiting private sector developers. Before they can get access to traditional sources of commercial capital, developers have to prove their business model ***over a minimum scale*** (e.g., $xx million in sales) ***and over a sufficient period of time*** (e.g., 3-4 financial years). These barriers more specifically include insufficient market capital, perceived high risk and relatively low return on investment, risk of non-payment of tariffs, high transaction costs for financing small projects, high up-front capital costs, high interest rates and short tenors, high cost of equity finance, insufficient net worth and limited experience of private sector entrepreneurial firms (which makes debt financing difficult), low liquidity and power sector exposure constraints of local commercial banks, inadequate experience of commercial banks to evaluate projects, and difficulty in channelling MDB funds through local financial institutions.

13. Whilst the policy and regulatory environment in India is relatively conducive to mini grid development, unfortunately private sector developers in Indonesia and the Philippines face barriers in this regard. In Indonesia, the state owned power company (PLN) has a

[11] Rolland., S., Glania, G., 2011. Hybrid Mini-Grids For Rural Electrification: Lessons Learned. USAid and the Alliance for Rural Electrification, Brussels, March 2011.

monopoly on power distribution, and other companies are not allowed to supply electricity without permission from the company (so far, permission has not been granted)[12]. In the Philippines, licensing procedures have limited growth and currently only one company has managed to negotiate the regulatory requirements to serve the market[13]. The proposed TA under this Program will specifically share lessons learned to impact regulatory and policy barriers in the pilot countries to facilitate more streamlined processes for private sector mini grid developers.

14. By specifically targeting financial, regulatory, policy and project specific barriers through technical assistance and investment capital, it is anticipated this Program will deliver the scale and replicability needed to attract commercial financing and "mainstream" mini-grid development in CTF pilot countries.

D. Overview of the Proposed Program

15. ADB proposes a $34.3 million Program to be funded by the CTF Dedicated Private Sector Program for the promotion and development of renewable mini-grid and distributed power systems in India, Indonesia and the Philippines. The concept for this Program was endorsed by the CTF Trust Fund Committee in November 2013. A total of $30 million would be invested in a combination of: (i) mini-grid and distributed power companies (direct investments), and (ii) impact investment funds. A grant of $3.5 million would be allocated for establishing a technical assistance, project advisory and knowledge management facility to support and reinforce the investment strategy.

16. ADB's Private Sector Operations Department (ADB-PSOD) is currently evaluating approximately 30 prospective mini-grid and distributed power companies and impact funds with a positive track record in Asia (see Appendix 5). The companies are contemplating projects ranging in capacity from 100 kW to 5 MW, and it is estimated that an investment of $30 million would provide sustainable electricity supply to between 50,000 and 100,000 households[14]. The prospective investment pipeline of companies and funds forms part of **ADB's Energy for All Partnership** and preliminary due diligence has been conducted on these companies.

17. The advisory services, provided through an ADB-managed TA, will conduct due diligence for companies and funds with candidate investments based on their ability to deliver RE-based mini-grid solutions in accordance with the results framework. The advisory team will assist in deal sourcing and investment pipeline management including the following activities: (i) identifying, pre-screening and selecting companies and funds with candidate projects meeting ADB and CTF investment criteria, (ii) evaluating and finalizing business plans and due diligence of the first set of projects; (ii) establishing templates for legal documentation that can be replicated across projects and different products; and (iii) capacity building with local financial institutions and other investment partners to ensure leverage of capital resources from sources other than ADB and CTF. The advisory services component will also seek to promote knowledge sharing of successful business models with governments, electric utilities and other stakeholders to encourage improvements in the

[12] International Finance Corporation, 2012. From Gap to Opportunity: Business Models for Scaling Up Energy Access. May 2012, IFC.
[13] International Finance Corporation, 2012. From Gap to Opportunity: Business Models for Scaling Up Energy Access. May 2012, IFC.
[14] Based on consumption of between 0.8-1.6 kWh per household per day (100-200W per household for 8 hours per day).

regulatory and investment environment for more private sector involvement in this market segment. Regulatory and policy barriers will be addressed through ADB's on-going engagement with governments and regulators in India, Indonesia and the Philippines, and will focus on demystifying issues relating to allowing private companies to establish sources of off-grid generation.

18. The TA will also develop knowledge products from these investments and facilitate "south-south" sharing of successes and business models. For example, we see some entrepreneurs in India looking to sub-Saharan Africa for their expansion. These activities are necessary for replication and scale beyond the projects directly supported by the program. The TA will be integrated with ADB's existing Energy for All Initiative, which has assisted ADB-PSOD in identifying energy access investment opportunities.

E. Market Transformation

19. Mini-grids offer the prospect of decentralized and distributed energy service provision analogous to that provided by modern mobile telephone networks. The transformation of the global telecommunications business has been nothing short of astounding: today there are more mobile phones in the world than people, and obtaining a mobile phone is now within everyone's reach. The Program will address the fundamental challenge of transforming the energy landscape via combinations of new business models and technologies that deliver clean, reliable, and affordable energy to bottom-of-the-pyramid consumers who will likely never be served by conventional centralized electricity grids.

20. This Program will change the market for energy access in three critical ways. First, expanding access to clean, reliable, and affordable energy will improve the lives of people who do not yet have access to electricity and associated development benefits such as improved health, better education, and opportunities for income generation. Second, it will increase the scale of efforts to accelerate electrification in target countries through the involvement of the private sector. And third, it will leapfrog traditional GHG-intensive development which rely on petroleum fuels and coal, and promote the development of clean, renewable, reliable, low-carbon forms of energy. The Program is also aimed at encouraging policy-makers to recognise that a healthy enabling and investment environment for private sector mini-grid developers will be a critical step to achieving national and regional energy access and development goals.

21. The current market for mini-grids and distributed power is characterised by relatively few actors relative to the potential market size. There are a few promising private sector developers, and an enormous choice of potential locations, technologies, and business models to be employed. Of the various barriers noted above, financial barriers appear to be the most critical and their reduction through concessional financing is likely to allow business models to demonstrating commercial success or failure (recognizing that where there is some uncertainty, there will be both). Successful business models of private sector investment can then be scaled up and expanded to other regions, helped to transform the market.

22. This Program represents the largest single investment to date for mini-grid development in Asia[15], and is intended to achieve the critical mass of investment necessary

[15] It is worth noting recent progress on financing for mini grid and other off-grid projects in Africa. In June 2013 the US government announcement its USD 7 billion "Power Africa" initiative, aimed at doubling electricity access

for mini-grid development to proceed without the need for continuous infusion of concessional funds.

F. Summary of the Program and Use of CTF Funds

23. Through a combination of investment ($30 million) and advisory services ($3.5 million), the proposed Program will: (i) develop renewable energy off-grid and mini-grid solutions in target countries and expand the number of customers with access to modern energy; (ii) mobilize investment from the private sector to mainstream mini-grid development; (iii) increase the supply of renewable energy and reduce GHG emissions; and (iv) demonstrate private sector business models that can be replicated and scaled-up across the region.

24. The investment component will deliver a combination of debt and equity investments in approximately 10 projects, depending on project structure, financing requirements, and anticipated development impacts. CTF funds will be deployed as investment capital (loans, guarantees, quasi-equity and equity products). Resources will be used to finance gaps in the project's financing or company's plans to scale up implementation, partially mitigate credit risks of project sponsors, or perceived risks of other lenders, guarantee short or medium term loans to bridge timing gaps between capital expenditure needs and payment of government subsidies, and as lower-cost loans to help mitigate the high upfront capital costs of RE systems.

25. A portion of resources may be deployed into regional or country-specific impact investment funds, which are making direct equity or early stage seed capital investments in RE mini-grid and energy access projects and/or operators. While the focus of this Program will be on direct investments in the pilot countries, this complementary approach will allow additional scale up of equity resources for certain approaches with some of the MDB's existing partners, where relevant.

26. The proposed financial products will be aligned to specific project risks, and are consistent with the general findings and recommendations of prior review and analysis of the market risks in the target countries. Financing plans will be determined for each investee or borrower and reported at financial close.

27. The specific projects supported by the Program will be subject to full due diligence per ADB's procedures for private sector operations and approval by ADB's Board of Directors, as well as CTF guidelines. The exact terms and conditions of the CTF financing will be determined during ADB-PSOD due diligence. The principal of minimum concessionality will be applied.

28. It is anticipated that following Phase I of the Program, the geographic scope will be increased to include other CIF pilot countries in the Asia-Pacific region that can best make use of concessional funding for mini-grid development. ADB has identified good potential for expansion into other CIF countries in the Asia-Pacific region including Bangladesh, Myanmar[16], Nepal, Cambodia, Maldives, Papua New Guinea and the Pacific Region.

---

in sub-Saharan Africa over five years through a combination of loans, guarantees, credit enhancements and technical assistance. Private companies have initially agreed to contribute an additional USD 9 billion.

[16] Currently not a CIF country

FIT WITH CTF INVESTMENT CRITERIA

1. Potential GHG Emissions Savings, Potential Replication and Scale up, and Cost Effectiveness

29. The Program will support up to 10 MW of new generation capacity, with avoided GHG emissions of approximately 630,000 tons of carbon dioxide equivalent (tCO_2e) from the estimated 20 year life of the Program (roughly 31,500 tons CO_2e per year)[17]. This provides a cost effectiveness of CTF funds of approximately $54 per ton of CO_2e. Two different GHG accounting approaches produced similar estimates for the Program's emission reductions. Details of the GHG estimates are presented in Appendix 6.

30. With 615 million people having no access to electricity in developing countries in Asia and the Pacific, the replication and scale up potential for this Program is very large. While RE mini-grid projects may be inherently small, there are significant populations living in places where centralized grid extensions are not financially viable, and mini-grids are the most cost effective means of providing access to electricity.

31. Estimates for the immediate market potential of renewable mini grid, and other distributed off-grid development in the three pilot countries total around 1,190 MW (India – 553 MW[18], Indonesia – 390 MW[19], and Philippines – 250 MW[20]). These estimates are based on discussions with private sector developers, ADB's experience leveraging financing for the development of rural energy programs, and knowledge of relevant financial markets and policy and regulatory frameworks in these countries, the Program conservatively expects a replication and scale up potential of around 600 MW of new capacity. This would provide electricity to potentially 30 million people who previously had no access to electricity. The scale up would achieve emission reductions of around 37.5 million tonnes of CO_2e (roughly 1.89 million tons CO_2e per year), and a cost effectiveness of $38 per ton of CO_2e. The expected investment required would be roughly $1.4 billion[21]. These estimates are relatively conservative compared with for example India's stated aim of installing 2,000 MW of off-grid solar PV by 2022 under its National Solar Mission[22].

32. There is currently limited knowledge on learning rates for mini-grids (cost reductions associated with the doubling of capacity). The costs of project development, design, installation, and operations can be expected to decline as mini-grids operations advance in their learning curve. For purposes of predicting replication and scale up potential, system and installation costs are expected to decrease by 3% per year up to 2030.

---

[17] Please see Appendix 6 for details on calculations.
[18] cKinetics, 2013. Financing Decentralized Renewable Energy Mini Grids in India: Opportunities, Gaps, and Directions. cKinetics, September 2013.
[19] Australian Trade Comission, 2012. Market Research Report, Trade Opportunities, Low Emissions Technology and Services (LETS), Indonesia. Australian Government, April 2012.
[20] Intellecap (Intellectual Capital Advisory Services Private Limited) for International Finance Corporation, 2012. Lighting Asia: Solar Off-Grid Lighting Market analysis of: India, Bangladesh, Nepal, Pakistan, Indonesia, Cambodia and Philippines, February 2012.
[21] System and installation costs are expected to decrease by 3% per year up to 2030
[22] Indonesia and the Philippines, have not quantified targets for off-grid electrification.

Table 1 - GHG Emission Reductions and Cost Effectiveness for (i) the Program, and (ii) potential replication and scale up

	Directly supported by CTF ("the Program")		Potential replication and scale up	
GHG reductions	Up to 10 MW of installed mini-grid capacity	31,500 tons CO_2e per year	Up to 600 MW of installed mini-grid capacity	1.89 million tons CO_2e per year
Cost Effectiveness	CTF $54 / ton CO_2e		$38 / ton CO_2e	

33. Due to the relatively nascent market for mini-grids and financing barriers such as the lack of availability of debt and equity from domestic financial institutions, the financing leverage ratio for the Program is not expected to be high (relative to other CTF programs). With little access to affordable commercial capital, co-financed debt for companies is expected to be low, and only modest levels of co-financed equity are expected to be raised by funds. To be conservative, ADB has not assumed levels of co-financing for which availability is uncertain. As acknowledged in the concept paper when the CTF Dedicated Private Sector Program was presented to and endorsed by the CTF trust fund committee, the nature of this Program makes it difficult to set a target for financial leverage higher than 3 to 1.

2. Development Impact

34. The development benefits of this Program will be transformational: lighting for homes and schools, cleaner indoor air, better equipped health clinics, electricity for agricultural pumps and sanitation, more small and medium sized enterprises and more income-generating opportunities. This Program will lead to a connection of an estimated 50,000 to 100,000 households from the installation of 10 MW in mini-grid capacity, and will play a strong role in poverty eradication, reducing infant mortality, improving education, ameliorating gender inequality, attaining environmental sustainability, and accelerating global economic growth and prosperity. Communities and households will benefit primarily from improved lighting and communications technologies that can be provided at relatively low cost. This will result in increased literacy and numeracy, better education, improved health, increased social capacity and mobility, and increased capacity to generate income to improve living standards. In addition, there are likely to be around 30 direct jobs and 60 indirect jobs created for every MW of installed mini-grid capacity, leading to the creating of approximately 900 jobs from the Program[23]. ADB anticipates that the expansion of the Program in Phase II and II to additional CIF pilot countries in the Asia-Pacific region (Bangladesh, Myanmar, Nepal, Cambodia, Maldives, Papua New Guinea and the Pacific Region) will result in the applications of lessons learned and expansion of these development benefits across different geographical contexts.

35. Increasing access to reliable modern energy services using clean energy is directly linked to achieving four of the eight Millennium Development Goals. These are:

- Reducing poverty by creating jobs and income-generating opportunities (***MDG 1);***

[23] International Renewable Energy Agency, 2012. Renewable Energy Jobs & Access, June 2012, United Arab Emirates, IRENA, 2012.

- Liberating women and girls from time-consuming tasks such as collecting fuel, pounding grain and hauling water, thereby increasing the time available for education and economic activity (***MDGs 2 and 3***); and
- Ensuring environmental sustainability through the reduction of GHG emissions (***MDG 7***).

36. Performance indicators for the Program consistent with the CTF Results Framework are discussed below (in section 11). Other performance targets and indicators quantifying developmental impacts will be included in the formulation of a project design and monitoring framework for each individual project to be supported under this Program.

3. Implementation Potential

37. The Program has strong potential for implementation as it targets the immediate financial, commercial, regulatory and other barriers present in today's market preventing the rapid uptake of mini-grids. It will inject the necessary capital and supporting financial assistance to allow early stage mini-grid and energy access developers to work with local finance institutions, technology suppliers and installers to scale up operations.

38. Concessional financing will partially mitigate the burden of high capital costs of renewable energy projects, address the capital availability issue (e.g., avoiding high interest rates, personal guarantees and short tenors for debt financing), provide long-term capital through debt, equity and quasi-equity instruments, lower transaction costs for financing small projects, and lower the perceived high risk and relatively low return on investments.

39. Through its existing programs technical assistance, and lending activities in the region, ADB has established relationships with key government regulators and policy makers in pilot countries[24]. On-going dialogue indicates these organisations are receptive to increased private sector involvement in providing energy access, and in creating enabling environments more conducive to mini grid development. A component of the TA will be dedicated to enhancing enabling environments and south-south knowledge sharing, and it is anticipated that barriers to growth will be reduced by increasing the deal flow of projects moving through regulatory environments (as well as by providing capacity building and technical assistance to project developers to fulfil regulatory requirements). As is evident from the development of the UN's Clean Development Mechanism, once national authorities become comfortable with up-scaling of a particular technology or type of project, subsequent developers experience lower regulatory and administrative burden.

40. Like any energy project, technical risks are also particularly relevant to the Program's implementation. Due diligence conducted under the Program's TA will examine these technical risks, their impact on implementation and assess whether they can be mitigated by additional advisory services.

[24] In India, this includes the Ministry of New and Renewable Energy and the Power Grid Corporation of India. In Indonesia, this includes the Ministry of Energy and Mineral Resources, and the monopoly power utility Perusahaan Listrik Negara (PLN). In the Philippines, this includes the Department of Energy, the National Electrification Administration, the National Power Corporation of the Philippines' Small Power Utilities Group and the Electricity Regulatory Commission.

4. Additional Costs and Risk Premium

41. Additional costs for the Program mainly relate to transaction costs for establishing and growing mini-grid businesses. These transaction costs include the time and resources needed for fund raising, human resources, legal expenses, obtaining permits and licenses, travel, and other contingencies. It is estimated that transaction costs can be as high as 36% of generation costs for private sector micro-utilities[25]. This Program aims to assist projects with access to financial instruments particularly during the initial and scale-up phases when most transaction costs are high relative to the size of the company and size of financing.

42. Other additional costs and risks are expected to be relatively low due to the comprehensive nature of the Program involving a significant portion of technical assistance. Whilst the final make-up of investments and implementation activities will be determined through the technical assistance phase, ADB anticipates that most systems will be installed as comprehensive, off-grid solutions, thereby decreasing additional costs and risks associated with potential integration with larger projects. That is, the mini-grids will be relatively stand-alone in nature in terms of how they are implemented.

5. Financial Sustainability

43. The financial sustainability of this Program depends mainly on payment collection risk and the creditworthiness of the "offtakers". Many of these people will be from low income households in remote and rural areas, who may have poor or erratic financial resources (e.g., seasonal agricultural income). Whilst bill payment risk is difficult to eliminate, there is substantial evidence to show low income households generally have reliable incomes up to a threshold for essential household items such as lighting. An average poor family spends roughly $180 per year on kerosene and candles for lighting, which represents around 25 to 30 percent of a family's income[26]. The energy efficiency of burning kerosene to produce light is very low, and therefore lighting costs as much as $3 per kWh, and global expenditure on candles and kerosene for lighting amounts to $36 billion a year. Therefore, for many applications, mini-grids are generally viewed as a more affordable alternative to business as usual. There will be incentives and contractual obligations for companies and funds to adequately assess the financial sustainability risks of individual projects, and to not invest in those where target populations are likely to have insufficient financial resources to pay for electricity over the lifetime of the systems.

44. Each project supported by the Program will comply with meet ADB's policies for project investments. Projects financed under the Program will be subject to ADB's normal due diligence and risk assessments, including technical, financial, economic, environmental, social, integrity and risk analyses. Whilst private sector developers are likely to select more profitable projects to develop, the creditworthiness (or level of income) of user communities will not be the determining factor for selecting viable investments. In addition, criteria for profitability will likely be the size of the population, the density of the dwellings, the estimated demand (productive use), the remoteness and the level of scalability. Further to this, ADB has observed that successful mini grid projects often benefit from an "anchor" client in terms of either credit quality or electricity demand, which provides a stable base for the business.

[25] INENSUS (2012), "Challenges in Scaling of Micro-Utilities: Operation, Legal Frameworks and Financing", International Off-grid Renewable Energy Conference, http://iorec.org/pdf/3_Session%202.pdf
[26] Pope, C., 2012. Solar Power Off the Grid: Energy Access for World's Poor. Environment 360, Yale University, 2012.

Thus, it is anticipated that the Program will reach a range of customers with varying levels of income.

45. ADB has had good success providing financial resources to many under-developed parts of Asia[27], and CTF funding would draw on institutional resources involved in lending for these projects to ensure financial risks over the course of the Program are minimized. For example, prepaid or "pay as you go" meters are becoming an effective solution for off-grid electricity supply. Further to this, the Program's technical assistance component is likely to investigate the current status of micro-finance and micro-insurance in target countries to ameliorate payment risks.

6. Effective Use of Concessional Finance

46. In target countries, with young but growing pipelines of innovative private sector developers, concessional finance is required to overcome "first mover" barriers, lower the risk profile and expand the sector. It is needed to increase working capital, increase project implementation and to test business models. Concessional finance will increase the availability and lower the cost of debt (and other sources of financing), and facilitate higher internal rates of return for project developers, thereby leveraging increased investment (private and/or public) and greater installed capacity (MW). It will encourage new entrepreneurs to set up mini-grid systems and invest equity as they see opportunities for replication and scale-up, and as more projects commence exploratory programs and commercial operations, experience will be generated in terms of success rates, and comparisons of actual, as opposed to theoretical, results.

47. Significant financing is needed to pay for the high capital costs of renewable energy based mini-grids, and longer than usual terms are needed to account for the payback periods associated with these kinds of projects. However, commercial banks in target countries are not yet comfortable enough with perceived risks to offer financial products needed for mini grid development, either due to company experience, balance sheet or the size of financing. In target countries, interest rates for mini-grid type projects, if available at all, are generally in the order of 12-15% per annum[28] and likely also require guarantees from creditworthy sponsors or parent companies. These types of guarantees increase the overall cost of financing.

7. Mitigation of Market Distortions

48. Due to the early-stage nature of the sector, and the small pool of private sector developers, the market for distributed power generation and mini-grids is currently under-developed (especially in the context and scale of utility-scale and grid-connected projects). Initial assessment of the pipeline shows a few promising companies with a large, and relatively under-utilized, potential market rather than a range of companies vying for limited commercial opportunities.

49. Due to the small size of the investments contemplated under the Program (compared to scale up potential involving $1.4 billion of investment), there are unlikely to be negative market distortions. Concessional financing is required to spark growth in the market at this

[27] Refer to Appendix 8

[28] Benchmark lending rates as of January 2014 are 8.0%, 7.5% and 3.5% in India, Indonesia and the Philippines respectively (http://www.global-rates.com/). However, lending from commercial banks with additional risk premiums increase rates up to between 12 and 15%.

stage. However, as successful business models are proven and the market expands to the point where there are potential distortions, concessional financing will be scaled back. The principle of minimum concessionality will be applied to the Program's investments to avoid market distortions.

8. Risks

50. **Business Plan Execution**: Private sector companies are exposed to a range of context-specific business and management risks that may inhibit their ability to execute business plans (generally "market" risk). Assumptions made on financial parameters, the market for specialist products and services, quality of human resources, legal costs, competition, financial services and sales and marketing estimates present risk due to the infancy and instability of the market. The returns on investments for mini-grid projects are generally not considered to be as reliable (or as high) compared with other infrastructure projects, and commercial risks with high transaction costs may be seen by some developers to be unattractive until the market grows.

51. **Policy and Regulatory**: Whilst policy documents in pilot countries contain provisions for off-grid electrification, developers have experienced barriers in successfully satisfying regulatory requirements and implementing projects, notably in Indonesia and the Philippines. ADB's engagement with relevant regulatory bodies indicates there is openness to discussion on ways to increase private sector involvement in providing energy access, and a component of the TA will address ways to improve policy and regulatory frameworks, enhance knowledge sharing on these issues and create improved enabling environments. Support will also be provided to companies to assist in navigating these environments.

52. **Technical:** Technical risks for mini-grid development are generally not high due to the maturity of the technologies that they employ (solar, hydro, small wind and power backup technologies). However, they are usually technically more complex than other infrastructure projects due to their hybrid nature involving more than one technology. Technical customization of mini-grids is often required to address overall expected customer demand and physical village configurations. The Program would rely on adequate resource assessments, quality products, trained and experienced service providers, reliable warranties, acceptable system design, good installation and technical standards/codes for development. Whilst these risks are all manageable, long travel distances, poor transportation infrastructure extant in many areas of the target countries tend to exacerbate potential problems and pose risk to the projects in the Program.

53. **Soft systems (information, marketing, education and capacity building):** With low literacy rates, poor communications, and lack of trained personnel in some parts of India, Indonesia and the Philippines, investments will need to be made carefully to ensure the long term sustainability of the projects under the Program. Capacity building for users such as education and training will be a critical part of the Program, addressed through the technical assistance funding.

54. **Operation and Maintenance:** Sufficient resources for O&M are needed to ensure the long term sustainability of the installed systems for their 20 year estimated lifetime. The availability of technicians and spare parts will be critical to long term success, as well as the involvement of users in O&M. In most cases, the sale of the system is integrated with ongoing O&M and incentives are put in place for beneficiaries to become skilled workers for

the company. The remoteness, climates and challenging geography of some of the potential installation locations may pose additional O&M risks.

9. Performance Indicators

55. The performance indicators outlined below are derived from the CTF Results Measurement Framework, and will be tracked at least annually. Please note that other performance targets and indicators quantifying developmental impacts will be included in the formulation of Project Design and Monitoring Frameworks for individual projects to be supported under this Program.

Table 2 - Program performance indicators[29]

Program Performance Indicator		Baseline	Anticipated Results by April 2019 (5 years)
GHG emissions avoided		N/A	31,500 tons of CO_2 equivalent per annum
CTF financial leverage		N/A	3 to 1, inclusive of MDB co-financing ($20 million), and commercial/private sector debt and equity ($40 million) leveraged for a total of $90 million
Increased supply of RE	Installed capacity (MW)	0	Up to 10 MW of distributed power sources
	Generation (GWh/y)	0	Additional 29.2 GWh/y of distributed power sources
Number of previously non-electrified households provided with access to electricity		0	50,000 - 100,000 new households electrified
Number of new jobs generated		0	300 direct and 600 indirect jobs

[29] Other performance targets and indicators quantifying developmental impacts will be included in the formulation of a Project Design and Monitoring Framework for each individual project to be supported under this program.

Appendix 1 - Administrative Budget and MPIS

ADB Renewable Energy Mini-Grid and Distributed Power Generation Program	
Summary for 13 Years (including 3 year implementation period)	
Program Implementation (*internal staff costs for processing, appraising, negotiating, etc.)*	$ 150,000
Legal Services (*some legal documentation costs will be shared amongst projects*)	$ 200,000
Project Supervision (*investment administration, annual reviews, monitoring and evaluation*)	$ 300,000
Total	**$ 650,000**

Payment to MDB for project implementation support and supervision services (MPIS)	**$ 175,000**

Appendix 2 - Email from CTF Trustee confirming cash availability for this Program

To be obtained prior to TFC approval

Appendix 3 - Number of people without access to modern energy services by region, 2011 (million)[30]

Region/Country	Without access to electricity		Traditional use of biomass for cooking	
	Population	Share of population	Population	Share of population
Developing countries	1,257	23%	2,642	49%
Africa	600	57%	696	67%
Sub-Saharan Africa	599	68%	695	79%
Nigeria	84	52%	122	75%
South Africa	8	15%	6	13%
North Africa	1	1%	1	1%
Developing Asia	615	17%	1,869	51%
India	306	25%	818	66%
Pakistan	55	31%	112	63%
Indonesia	66	27%	103	42%
China	3	0%	446	33%
Latin America	24	5%	68	15%
Brazil	1	1%	12	6%
Middle East	19	9%	9	4%
World	1,258	18%	2642	38%

Note: In 2010, the Philippines had a population without access to electricity of 16 million people (17% share of the population)[31].

[30] International Energy Agency, 2013. World Energy Outlook, OECD/IEA, 2013, Paris, 2013
[31] International Energy Agency, 2012. World Energy Outlook, OECD/IEA, 2012, Paris, 2013

Appendix 4 – Features of centralized and mini grids

10. Mini-grids are small independent electricity networks, located away from large centralized electricity grids. Mini grids comprise of one or more sources of power generation, a small network that distributes electricity to consumers, and sometimes a form of energy storage such as a battery bank. "Mini" refers to the size of the system, often ranging from 1 kw to 1 MW, except for hydro mini-grids that can also exceed 1 MW of installed capacity. Depending on the location, demand and fuel or resource limitations, electricity mini-grids can supply households and businesses either in a single village, or across a number of villages. A comparison of the features of centralized grids and mini-grids can be found below.

Table 3 - Features of centralized electricity grids

Common generation technologies	Advantages	Disadvantages
• Coal • Gas/Oil • Hydro • Nuclear • Geothermal • Wind • Solar • Biomass	• Large scale • Able to support large scale industry and manufacturing • Low cost for densely populated areas, e.g. large cities	• Dominated by fossil fuel fired generation • Transmission and distribution network is high cost • Comparatively high cost of fuel (and sometimes volatile) • Extends usually only to regions with high population density • Slow to expand • Loss of power from transmission and distribution

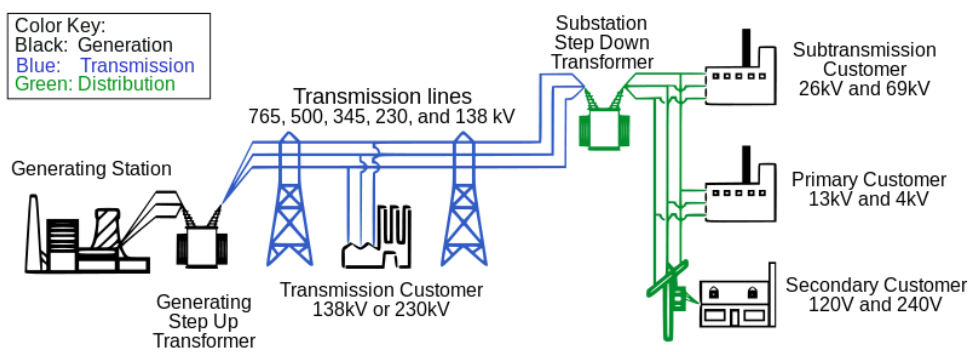

Source: Wikipedia

Table 4 - Features of autonomous mini-grids

Common generation technologies	Advantages	Disadvantages
• Hydro • Solar • Wind • Diesel • Solar/diesel hybrid • Wind/diesel hybrid • Hydro/diesel hybrid • Wind/solar hybrid • Note: stand-alone solar or wind systems need batteries, fuel cells or other forms of energy storage	• Can supply electricity to remote and rural areas • Often lower cost than extending the grid • Low on-going costs for renewable based systems (fuel is free) • Can be deployed fast • Creates local employment • Can be less bureaucratic, better suited to private sector development • Diesel generators are generally a familiar technology • Low power loss from distribution	• High capital cost • Higher O&M requirement • Higher system complexity • Diesel and diesel hybrids are subject to volatility of diesel prices • Fuel must be transported to mini grid location • Stand-alone solar or wind systems need energy storage such as batteries • Technical expertise often is difficult to find at the rural local level • Resource assessments and accurate load analysis require upfront analysis and site-specific designed systems • Unable to support large power demand from industry

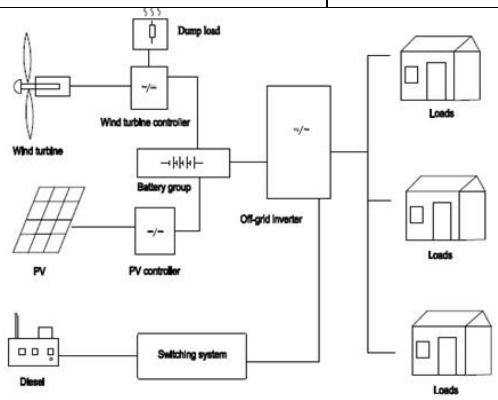

Sources: http://www.chinawindenergy.com/n-en/2012-1/content-51.html, http://www.makingitmagazine.net/?p=348

11. Mini-grids can be supplied with electricity from a variety of different sources, and can relatively easily incorporate combinations of alternative forms of generation such as hydro, solar photovoltaics or wind turbines. Small and micro-hydro technologies have become an affordable and reliable solution, but also the most site dependent, as they require rivers with specific flow rates and seasonal reliability. Small hydro is a mature technology which has been installed all over the world over the past 30 years.

12. Solar photovoltaic modules are suitable for most locations around the world, and have experienced a sharp decline in price over the past five years. They are comparatively easy to install, maintain and they are modular, meaning systems are relatively easy to scale up. Small wind power technology is mature reliable, and able to supply relatively large loads. However, since wind conditions vary between locations, wind resources must be carefully studied before a system is installed. It is possible to integrate sources of biomass or biogas

generation into mini-grids. However, utilization is not common for mini-grids except in places where there is a reliable supply of feedstock.

Appendix 5 – ADB-PSOD Pipeline of Potential Mini-Grid Companies and Impact Investment Funds

Country		Type of Company	Total funding requirement (USD)	Technology for mini grid	Expected deadline for raising funds
1	India	Mini-grid	4,000,000	Solar	Jun 2014
2	India	Mini-grid	5,000,000	Solar	Mar 2014
3	India	Mini-grid	3,000,000	Solar	Dec 2014
4	India	Biogas	710,000	Biogas	Dec 2014
5	India	Mini-grid	500,000	Solar	Dec 2014
6	India	Solar	500,000	Solar	Dec 2014
7	India	Mini-grid	500,000	Solar	Dec 2014
8	India	Bioenergy	500,000	Waste-to Energy	Dec 2014
9	India	Biogas	500,000	Biogas	Dec 2014
10	India	Solar	1,000,000	Solar	Dec 2014
11	India	Solar	500,000	Solar	Dec 2014
12	India	Bioenergy	500,000	Waste-to Energy	Dec 2014
13	India	Solar	600,000	Solar	Oct 2015
14	India	Metering	500,000	Solar	Ongoing
15	India	Biomass	200,000	Biomass	Unknown
16	India	Biomass	2,000,000	Biomass	Unknown
17	India	Solar	7,000,000	Solar	Jun 2014
18	India	Solar	1,000,000	Solar	Unknown
19	India	Solar	TBD	Solar	Dec 2014
Subtotal India:			**28,510,000**		
20	Indonesia	RE	500,000	Micro-hydro	Dec 2014
21	Indonesia	RE	500,000	Hydro	Dec 2014
22	Indonesia	RE	TBD	Solar	
23	Indonesia	Lighting	TBD	Solar, RE	
Subtotal Indonesia:			**1,000,000**		
24	Philippines	Private	500,000	Solar	Dec 2014
25	Philippines	Private	4,000,000	Solar, biomass	Dec 2014
26	Philippines	Private	TBD	Micro-hydro	
27	Philippines	Private	TBD	Micro-hydro	
28	Philippines	Private	TBD	Micro-hydro	
Subtotal Philippines:			**4,500,000**		
29	India	Fund	12,000,000	RE	Dec 2014
30	India and Cambodia	Fund	15,000,000	RE	Dec 2014
31	Asia	Fund	50,000,000	Solar	Dec 2014
32	India	Fund	60,000,000	RE	Dec 2014
33	India	Fund	TBD	RE	Dec 2014
Subtotal Funds			**137,000,000**		
Total:			**171,010,000**		

NOTE: TBD = to be determined during due diligence; RE = renewable energy

Appendix 6 – Cost Effectiveness and Emission Reduction Calculations

Cost calculations

13. Based on recent data from case studies, the cost of mini grid systems in India is likely to be in the order of $2.5 million per MW (see data in the following table). For the Program, the average cost per MW of mini-grid capacity installed was assumed to be $3 million per MW. This is a slightly more conservative figure, and takes into account the slightly higher cost of installation anticipated in Indonesia and the Philippines where mini grids are less common.

Table 5 - Costs from recent case studies in India[32]

Capacity (kW)	Cost (local currency)	Cost (USD equivalent)	Cost per MW
32	INR 3,200,000	USD 51,719	USD 1,616,230
35	INR 3,500,000	USD 56,568	USD 1,616,230
43	INR 4,300,000	USD 69,498	USD 1,616,230
150	INR 15,000,000	USD 242,434	USD 1,616,230
50	INR 2,000,000	USD 32,325	USD 646,492
32	INR 2,000,000	USD 32,325	USD 1,010,143
2	INR 15,000,000	USD 242,434	USD 121,217,215
2	INR 1,500,000	USD 24,243	USD 12,121,721
2	INR 1,500,000	USD 24,243	USD 12,121,721
4.5	INR 1,800,000	USD 29,092	USD 6,464,918
120	INR 24,000,000	USD 387,895	USD 3,232,459
	Average Cost	**USD 2,524,397**	**per MW**

14. The Program's other parameters and calculations for emission reductions (using two different methods) and cost effectiveness are presented in the following four tables.

[32] Daniel Schnitzer, Deepa Shinde Lounsbury, Juan Pablo Carvallo, Ranjit Deshmukh, Jay Apt, and Daniel M. Kammen, 2014. Microgrids for Rural Electrification: A critical review of best practices based on seven case studies. United Nations Foundation, February 2014

Table 6 - General Program Parameters

Proposed Program funding	$ 34,150,000	
Proposed Program funding for investment	$ 30,000,000	
Cost of mini grids installed	$ 3,000,000	per MW
Capacity of Program	10	MW
Electricity demand from each household	100	W
Duration of demand from each household per day	8	hours per day
Electricity used per household per year	0.292	MWh per year
Number of households in Program	100,000	households
Number of people per household	5	people
Number of people reached by program	500,000	people
Electricity generated by the Program per year	29,200	MWh per year
Renewable energy component of mini grid	100%	
Renewable energy electricity generated	29,200	MWh per year
Program lifetime	20	years

Notes: assumed that each house has 2 x 20 W lighting + 60 W fan or other appliance

Table 7 - Emission reductions and cost effectiveness of Program using DEFRA/DECC emission factors

Emission factor for Diesel fuel (100% mineral diesel)*	3.2413	kg CO2 / L
Efficiency of average diesel generator in India, Indonesia and the Philippines	3.0	kWh / L
Emission factor for average diesel generator	1.0804	tCO2 / MWh
Emission reductions per year	31,549	tCO2e / year
Total emission reductions for Program	**630,973**	**tCO2e**
Cost Effectiveness based on total GHG reductions directly supported by CTF	**$ 54**	**per tCO2e**

* AEA, 2012. 2012 Guidelines to DEFRA / DECC's GHG Conversion Factors for Company Reporting Produced by AEA for the Department of Energy and Climate Change (DECC) and the Department for Environment, Food and Rural Affairs (DEFRA). 28 May 2012. https://www.gov.uk/government/uploads/system/uploads/attachment_data/file/69554/pb13773-ghg-conversion-factors-2012.pdf

Table 8 - Emission reductions and cost effectiveness of Program using CDM Methodology AMS III.BB. Electrification of communities through grid extension or construction of new mini-grids

Emission factor for first 55 kWh of household consumption	6.82	tCO2 / MWh
Emission factor for 55 to 250 kWh of household consumption	1.3	tCO2 / MWh
Emission factor beyond 250 kWh of household consumption	1.0	tCO2 / MWh
Electricity used per household per year	292	kWh / year
Emission reductions for first 55 kWh with RE component	0.375	tCO2e
Emission reductions for 55 to 250 kWh with RE component	0.254	tCO2e
Emission reductions for remaining consumption with RE component	0.00004	tCO2e
Total emission reductions per household for year 1	0.629	tCO2e
Total emission reductions per household for years 2 to 20	0.292	tCO2e / year
Total emissions for the Program per year	30,883	tCO2e / year
Total emission reductions for Program	**617,664**	**tCO2e**
Cost Effectiveness based on total GHG reductions directly supported by CTF	**$ 55**	**per tCO2e**

* http://cdm.unfccc.int/filestorage/C/D/M/CDM_AMSJP5XUZX5NL6X7OTKA0FNLXYHKXZ05T/EB67_repan17_SSC-III.BB-ver01.0.pdf?t=Nm58bXp3ZDllfDDpn9oa0d66x1lm640QS9ON

Under this CDM methodology, 75% of electricity must go to households

Table 9 - Cost effectiveness based on total GHG reductions with potential replication and scale up

Scale up potential	600	MW
Estimated households affected by scale up	6,000,000	households
Estimated people affected by scale up	30,000,000	people
Estimated electricity generation from scale up	1,752,000	MWh per year
Time for scale up (years to 2030)	16	years
Additional capacity per year (assumed linear)	37.50	MW per year
Annual cost reduction for scale up	3%	per year
Estimated investment required for replication and scale up to 2030	$ 1,446,548,800	

Emission reductions at scale-up potential using DEFRA/DECC emission factors	1,892,919	tCO2e per year
	37,858,384	tCO2e over 20 years
Cost effectiveness based on total GHG reductions with potential replication and scale up	**$ 38**	**per tCO2e**

Appendix 7 – Energy sector context and background

A. India

15. India's growing economy and population are placing a strain on the country's energy infrastructure. Electricity demand per person is expected to grow from 630 kilowatt-hours (kWh) to 1,000 kWh over the next five years. Since economic reforms in 1991, India has experienced a major transformation of its energy mix, shifting from biomass to other energy sources, especially coal. However, Biomass, fuel wood and animal waste are widely used for cooking and heating purposes by low income households, primarily in rural areas. In 2009, India's largest primary energy source was coal, with a share of 42%. The second largest source was biomass at 25%, decreased from 42% in 1990. In 2009, oil represented 24% and natural gas 7%. A 2012 report by the IEA estimated that nearly 25 percent of the population 289 million people lacks basic access to electricity, while electrified areas suffer from rolling electricity blackouts. The government seeks to balance the need for electricity with environmental concerns from the use of coal and other energy sources used to produce that electricity[33].

16. In 2011, India was the fourth largest energy consumer in the world after the United States, China, and Russia. India's economy grew at an annual rate of approximately 7 percent since 2000. The Government of India is highly committed to this role and has reflected this commitment through its various recent policy actions; such as the National Action Plan for Climate Change (2008), and the focus on 'sustainable growth' for the current 12th Five Year Plan (2012-2017).

17. In the power sector central and state governments share responsibilities. Until the 5th Five-Year Plan (FYP 1974-79) that created electricity utilities under the central government, state governments were solely in charge of power sector development through the state electricity boards (SEBs) monopolizing generation, transmission and distribution.

18. The source of India's current electricity regulatory framework is the 2003 Electricity Act, which attempted to reform the state electricity boards, open access to transmission and distribution networks, and create state electricity regulatory commissions (SERCs) to manage electricity on a regional basis. The government has not fully implemented many parts of the Act, and India's electricity sector continues to face challenges in distribution and getting sufficient fuels for generation with the Electricity Act 2003 and unbundling of SEBs, a multitude of market players emerged in India's power sector[34].

19. The government established the Power Grid Corporation of India to operate five regional electricity grids, while state transmission utilities (with some private sector participation) run most transmission and distribution segments. However, the central government finances electricity development projects, and the responsibility for delivering electricity to customers falls on state governments. Therefore, more efficient states tend to have better electricity availability[35]. Several entrepreneurial private firms have thus far invested in the provision of off-grid electricity services through mini-grid operations.

---

33 IEA (2012). Understanding the energy challenge in India. http://www.iea.org/publications/freepublications/publication/India_study_FINAL_WEB.pdf
34 Ibid.
35 IEA (2013). India Country Information. http://www.eia.gov/countries/cab.cfm?fips=IN

20. The Ministry of Power is responsible for planning and implementing India's power sector policy. The Central Electricity Regulatory Commission and State Electricity Regulatory Commissions set generation and transmission policies.

Major policies and government schemes include:

a. Electricity Act, 2003. The Act has been a major step towards liberalizing the power market in India, encouraging competition and attracting private investment. In addition, the act specifies distributed generation and supply through stand-alone conventional and renewable energy systems.

b. National Electricity Policy 2005. The Policy states that to provide rural electrification system, a rural electrification distribution backbone will be established. However, if not feasible, it directs that decentralized generation facilities together with local distribution network be provided.

c. Rural Electrification Policy 2006. The policy states that decentralized distribution facilities together with local distribution network may be based either conventional or non-conventional methods of electricity generation. Non-conventional sources of energy could be utilized even where grid connectivity exists provided it is found more cost effective.

d. Rajiv Gandhi Grameen Vidyutikaran Yojana (RGGVY). The central government launched this program to improve rural electricity infrastructure and household electrification which supports rural electrification projects at a state level with a grant of 90% provided by the central government and 10% by loan provided by the Rural Electrification Corporation.

e. Jawaharlal Nehru National Solar Mission. The solar mission was launched in 2010 is an initiative of the central government to promote ecologically and economically sustainable growth in solar power generation by creating an enabling policy and regulatory framework. It aims to enable the installation of another 2,000 MW of off-grid solar power by 2022.

B. Indonesia

21. A former OPEC country, Indonesia has been mainly exploring its own oil resources in the past. The focus of its energy supply has been primarily based on fossil fuels like oil (43%), gas (19%) and carbon (34%). Renewable energy only contributes to a 4%, despite the country's large potential, especially for hydro and geothermal energy. 36 The total power generation in Indonesia is around 50 GW. State utility Perusahaan Listrik Negara (PLN) accounts for 84% of total electricity transmission, while independent power producers (IPPs) account for 16%[37].

22. Being the fifth largest GHG emission producing country, the government set the target of electricity coverage of 90% through its National Energy Plan while reducing greenhouse gas emissions by 26% by the year 2020. Fuel and electricity subsidies present a

[36] Energypedia (2013). Indonesia Energy Situation. https://energypedia.info/wiki/Indonesia_Energy_Situation
[37] GBG Indonesia (2013). Indonesia's Electricity and Power Generation Sector. http://www.gbgindonesia.com/en/energy/article/2012/indonesia_s_electricity_and_power_generation_sector.php

major burden to the national budget accounting for almost $20 billion[38]. Due to these subsidies, the state utility PLN is continuously short of funds to extend its grid and to invest in new power generation, especially in rural areas where costs of electrification are much higher than in densely populated areas. The government seeks to reduce subsidies in the future and intends raising the electricity price by a proposed 4.3% each quarter in 2013 is designed to raise funds for further investment by PLN to increase electricity coverage and to purchase more electricity.[39]

23. Since generation plants operate at a capacity of 66%. With the growing population, Indonesia faces severe challenges in meeting its growing energy demand is already behind its electrification targets. In recent years consumption of electricity has increased by 7 per cent annually. The country is already facing severe power outages. About 80% of the electricity is consumed on Java und Bali alone, both islands also with the highest electricity rate of about 75%. In the world's largest archipelago, 63 million people (44% of the rural population) do not have access to electricity.

24. The Government has accelerated efforts to develop new and renewable energy sources to meet future energy demand. Despite these efforts, the country's renewable energy facilities only account for 10% of the total on-grid installed capacity, mainly consisting of large-scale hydropower and geothermal. Diesel generators however dominate the off-grid sector.

25. Energy policies for rural electrification are developed by the Directorate General for Electricity and Energy Utilisation of the Ministry for Energy and Mineral Resources (MEMR). Relevant policies and schemes include[40]:

a. Presidential Decree No. 5: The Degree mandates an increase in renewable energy production from 7% to 15% of generating capacity by 2025, which will require the installation of some 6.7 GW of RE projects.

b. The National Energy Policy (2006): The National Energy Policy strengthened the position of cooperatives, private companies, and community organizations in PPA negotiations. The Ministerial Regulation on Small-Scale Power Purchase Agreements requires PLN to purchase electricity generated from renewable energy sources by non-PLN producers for projects of up to 1 MW capacity.

c. PSK Tersebar: The regulation requires PLN to purchase electricity generated from RE sources by non-PLN producers for projects of up to 1 MW capacity.

d. Energy Self-sufficient Villages program (DME) (since 2005): A government scheme that supports rural energy related activities by Indonesian ministries if they result in a village's energy self-sufficiency of at least 60%. Current projects under the DME mainly focus on biofuels based on Cassava, Nyamblung and Jatropha. The implementation of the DME is significantly delayed and the target for 2009 was not reached.

[38] IISD (2012). Indonesia's fuel subsidies – Action Plan for Reform: http://www.iisd.org/gsi/sites/default/files/ffs_actionplan_indonesia.pdf
[39] GBG Indonesia (2013). Indonesia's Electricity and Power Generation Sector. http://www.gbgindonesia.com/en/energy/article/2012/indonesia_s_electricity_and_power_generation_sector.php
[40] Energypedia (2013). Indonesia Energy Situation. https://energypedia.info/wiki/Indonesia_Energy_Situation

e. Renewable Energy Feed-in Tariff (FiT) (since 2012) for biomass, biogas and municipal solid waste. The FiT guarantees access to the grid for renewable energy generators and obligation for PLN to purchase the renewable energy generated until capacity 10 MW.

C. Philippines

26. In 2011, total primary energy consumption in the Philippines was roughly 1.6 quadrillion Btu. Oil constituted around 40% of total consumption, both coal and solid biomass and waste made up around 20% each, and the remainder came from natural gas and various renewable sources. Philippines' energy mix already includes a high capacity of renewable energy. The country has only limited fossil fuel reserves and meets its demand mainly through import which explains that the Philippines has the 2nd highest electricity rates in Asia and the 4th highest in the world. As far as renewable energy sources, the Department of Energy reported that 40.6 percent of the primary energy mix was contributed by renewable energy sources in 2011, primarily composed of geothermal at 21.7 percent, followed by biomass at 12.4 percent and hydro at 6 percent.

27. Electrification levels in Philippines have made significant progress in the last decade. 16 million (23%) do not have access to electricity. However, these rates vary widely from as high as 99% in Central Luzon to as low as 10% in the Autonomous Region of Muslim Mindanao.[41]

28. Electricity distribution is strictly regulated in Philippines. There are 143 licensed Electricity Distribution Units (DUs) in Philippines, 16 of them investor owned, 8 local government owned and 119 Electric Cooperatives (ECs) which are small not-for-profit entities owned and controlled by locally elected boards and member consumers. The National Electrification Administration (NEA), a Government owned and controlled corporation, is responsible for achieving the Government's goal of total rural electrification through supervising and supporting the operations of the ECs.

29. Historically, the Philippine Power Sector was private sector-led by as early as 1930 but monopolized in 1972 at the onset of Martial Law. The National Power Corporation (NPC) was transformed into the sole player in the power generation and transmission sector. After Martial Law, the industry experienced its first deregulation period and in 2001, through the Electric Power Industry Reform Act (EPIRA), the sector was essentially privatized.

30. The National Grid Corporation of the Philippines (NGCP) is responsible for the major grids and Small Power Utilities Group (NPC-SPUG) small island grids. Not all areas in the country are reached by the grid. In SPUG areas, NPC has been providing diesel mini-grids, many of them not operating anymore due to high costs and technical problems. As a remedial measure to cope with the power demand in additional SPUG areas with aging gensets, NPC moved to a short-to-medium-term (1 to 2 years) genset rental-model. The ECs are under constant pressure to increase their electrification rates by extending their distribution lines, even though funding is often insufficient to build new substations to support these extensions. Hence, ECs are forced to operate long feeder lines resulting in high system losses and unreliable power supply to end customers.

[41] TA-7781 (PHI): Rural Community-Based Renewable Energy Development in Mindanao TA Consultants Report – Final

31. ECs may also choose to invite private companies to provide off-grid electrification for their remote barangays to qualified third parties (QTPs) which are qualified to build, own, generate and distribute power in “missionary areas”, as declared by the Department of Energy and may avail of subsidies, known as Universal Charge designated for Missionary Electrification (UCME) to ensure their viability. Small-scale private sector-driven or community-based electrification projects which do not require subsidy from the UCME do not need to go through the rigorous process of getting DOE and ERC approval processes as QTP but may proceed with the service provided that the proponent/operators if their generating capacity is below 200 kW or has fewer than 100 connections and its retail rate is equal or lower than the ERC-approved Subsidized Approved Retail Rate (SARR) in the Declared Unviable Area where it operates.

32. Two major laws embody the Government of Philippines’ Policy and Regulatory Framework covering Off-grid Renewable Energy Development: The Republic Act 9136 otherwise known as the Electric Power Industry Reform Act of 2001 (EPIRA and the Republic Act 9513 also known as the Renewable Energy Act of 2008 (RE Act).

a. As mentioned above, EPIRA initiated the privatization of the national power sector. It also provided for the opening-up of remote areas to QTPs to generate and distribute power, other than the franchised distribution utility (such as the Electric Cooperatives).

b. The second important law for off-grid electrification is the Renewable Energy Act of 2008 (RE Act). The RE Act specifies that: NPC-SPUG or its successors-in-interest and/or QTPs in off-grid areas shall, in the performance of its mandate to provide missionary electrification, source a minimum percentage of its total annual generation upon recommendation of the National Renewable Energy Board (NREB) from available RE resources in the area concerned, as may be determined by the DOE. Eligible RE generation in off-grid and missionary areas shall be eligible for the provision of RE Certificates which entitles RE developers to incentives such as including income tax holiday, duty free import of RE machinery, equipment and materials, special reality tax rates on equipment and machinery, net operating loss carry over, tax exemptions, etc.

Appendix 8 - Energy for All Partnership[42]

33. In developing Asia, 615 million people have no access to electricity, while 1.8 billion people still rely on traditional biomass for cooking. This keeps at least 18% of the population from contributing effectively to the national economy and reaping the benefits of improved health and living standards. In response to the binding threat of energy poverty, the Asian Development Bank initiated the Energy for All program. Since its launch in 2008, ADB has invested a total of $3.8 billion in energy access related projects[43], and provided modern energy to more than 67 million people.

Table 10 - ADB investment in the energy access sector

Year	Investments ($ Million)	New Connections: Electricity (HH)	Improved Connections: Electricity (HH)	New Connections: Gas/Heating (HH)	Improved Connections: Gas/Heating (HH)	Improved Energy Access (HH)
2008	476.36	384,368	72,439	0	0	456,807
2009	420.58	138,241	85,139	34,468	0	257,847
2010	946.23	534,771	207,205	578,567	233,586	1,554,128
2011	1,035.34	6,645,826	1,005,000	76,100	0	7,726,926
2012	942.00	24,500	2,333,511	300,000	738,116	3,396,126
TOTAL	**3,821**	**7,727,706**	**3,703,293**	**989,134**	**971,702**	**13,391,834**

34. Energy for All is an ADB-led initiative founded in 2008 with the aim of providing 100 million people with sustainable energy by 2015. It follows a two-pronged approach: (i) It supports ADB's private and public operations in identifying high-impact investment opportunities in energy access; and (ii) it assists Energy for All partners in scaling up access to energy activities by focusing on project development, knowledge management, capacity building and investment facilitation through a stakeholder platform, the Energy for All Partnership.

35. In order to promote sustainable, long-term and financially viable energy access, Energy for All's goal is to catalyze long-term and sustainable impact to the energy poor in Asia and the Pacific. The initiative identifies what mechanism is capable of delivering on this goal consistently and sustainably over time. In the past, non-profits took on this role and made significant contributions in the sector. However, due to the grant-dependent and time-bound nature of their programs, the quality of the support they offer is difficult to extend beyond the program's lifetime. In recent years however, social enterprises have slowly emerged as the new champions in delivering social impact. Energy for All is focusing on supporting the subset of these social enterprises that provide clean energy to poor. The most successful among these "energy access enterprises" are private sector companies that are able to monetize their value proposition and sustain their operations commercially.

[42] http://www.adb.org/sectors/energy/programs/energy-for-all-initiative
http://www.energyforall.info/
[43] This includes improved transmission and distribution projects for centralized grids.